LONG SEAMS

COURSE	ORIENTATION	ORIENTATION
1(TOP)	90°	270°
2	95°	275°
3	90°	270°
4	95°	275°

*VERT – TOP TO BOTTOM

Ship loose items:
(1 PC) A71-24 (GALV.) SWING GATE
(6 PC) HANDRAIL W/ HARDWARE

NOTE: 7) X-RAY: SPOT X-RAY FOR NOZZLE N5 AND REPAD FOR NOZZLE N5 PER CODE.

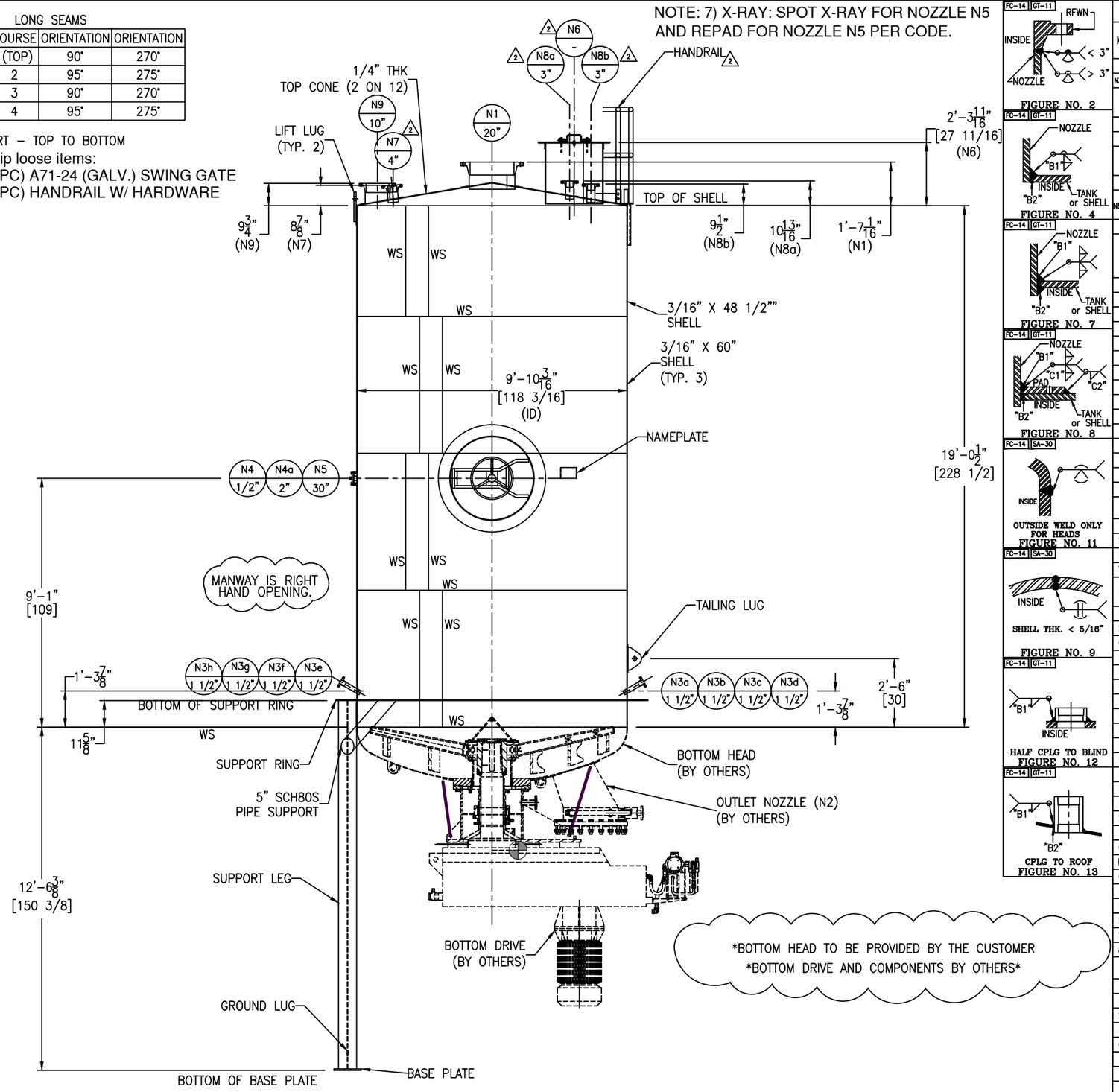

*BOTTOM HEAD TO BE PROVIDED BY THE CUSTOMER
BOTTOM DRIVE AND COMPONENTS BY OTHERS

FIGURE NO. 2

FIGURE NO. 4

FIGURE NO. 7

FIGURE NO. 8

OUTSIDE WELD ONLY FOR HEADS
FIGURE NO. 11

SHELL THK. < 5/16"
FIGURE NO. 9

HALF CPLG TO BLIND
FIGURE NO. 12

CPLG TO ROOF
FIGURE NO. 13

NOZZLE SCHEDULE

MARK	SERVICE	SIZE	RATING	TYPE / STYLE	NECK SCHED.	PROJECTION EXT. (E)	PROJECTION INT. (MIN.)	WELD FIGURE	REPAD SIZE (WIDTH X THK.)	WELD SIZE "A1"	"A2"	"B1"	"B2"	"C1"	"C2"
N1	INLET	20"	150#	RFWN	3/8"	SEE DWG	1"	2,7	3 1/2" X 3/16"	–	–	1/4	1/8	3/16	3/16
N3a–N3h	FLUSHING (X8)	1 1/2"	150#	RFWN (X8)	80S	SEE DWG	1"	2,7	–	–	–	3/16	1/8	–	–
N4	TEMPERATURE TRANSMITTER	1/2"	3000#	THRD. HALF. CPLG. W/PLUG	–	–	–	12	–	–	–	3/16	–	–	–
N4a	N4 BASE NOZZLE	2"	150#	STUDPAD W/BLIND	–	–	–	4	–	–	–	3/16	1/8	–	–
N5	MANHOLE	30"	–	CM–2	1/4"	3"	SEE DWG	8	5" X 3/16"	–	–	3/16	1/8	3/16	3/16
N6	MAINTENANCE HATCH	26 3/8" X 47 1/4" 2	–	32 7/8" X 53 3/4" COVER W/HINGE	1/4	SEE DWG	1"	7	2" X 3/16"	–	–	3/16	1/8	3/16	3/16
N7	LEVEL TRANSMITTER	4"	150#	RFWN	40S	SEE DWG	1"	2,7	2" X 3/16"	–	–	1/4	1/8	3/16	3/16
N8a–N8b	LEVEL SWITCH	3"	150#	RFWN	40S	SEE DWG	1"	2,7	2" X 3/16"	–	–	1/4	1/8	3/16"	3/16"
N9	AIR VENT	10"	150#	RFWN	40S	SEE DWG	–	2,4	2" X 3/16"	–	–	1/4	1/8	3/16	3/16

BY OTHERS (WITH BOTTOM HEAD)

N2	OUTLET FLANGE	24"	150#	RFSO
N10	DILUTION FLANGE	2"	150#	LJSE
N11	SEALING WATER INLET	1/4"	3000#	THRD. CPLG.
N12	SEALING WATER INLET	1/4"	3000#	THRD. CPLG.
N13	SEALING WATER OUTLET	4"	150	RFSO
N14	DILUTION FLANGE	2"	150#	RFSO

NECK SCHEDULE AND WELDS TO BE CONFIRMED

MATERIALS OF CONSTRUCTION

	VESSEL
SHELL	SA240–316/316L
BOTTOM HEAD (BY OTHERS)	SS316
TOP CONE	SA240–316/316L
NOZZLE NECKS	SA312–316/316L WLD & SA403–316/316L WPB & SA240–316/316L
NOZZLE FLANGES	SA182F–316/316L
STUD PAD	SA240–316/316L OR SA182F–316/316L
COUPLING/PLUG	SA182F–316/316L
MANWAY NECKS	SS316
MANWAY FLANGES	SS316
MANWAY GASKETS	BUNA–N
HATCH NECK	SA240–316/316L
HATCH FLANGE	SA479–316/316L
HATCH COVER	SA240–316/316L
BOLTS/STUDS (NOZZLE)	SA193–B8 (TEFLON COATED)
NUTS (NOZZLE)	SA194–8 (TEFLON COATED)
BOLTS (STRICTURE)	SA193–B7 (ZINC PLATED)
NUTS (STRUCTURE)	SA194–2H (ZINC PLATED)
REPADS	SA240–304/304L
SUPPORTS/HOLD DOWNS	SA240–304/304L & SA479–304/304L
LIFTING/TAILING LUGS	SA240–304/304L
GROUND LUG	SA240–304/304L
BOTTOM HEAD & COMPONENTS	SA240–316/316L
CROSS BRACE STRUCTURE	SA479–304/304L & SA240–304/304L
HANDRAIL	SA500
HANDRAIL CLIPS	SA479–304/304L
SUPPORT RING	SA240–304/304L
SUPPORT PIPE	SA312–304/304L WLD
JACKET NOZZLE FLANGES	–

DESIGN DATA

	VESSEL
DESIGN AND FAB. CODE	API650 (AS APPLICABLE)
CERT. STAMP REQ'D.	NO
DESIGN PRESSURE	ATM/0.0725189 PSIG
DESIGN TEMPERATURE	212° F
MIN. DESIGN METAL TEMP.	–20° F @ ATM
OPERATING PRESSURE	ATM
OPERATING TEMPERATURE	140° F
JOINT EFFICIENCY HEADS	0.70
JOINT EFFICIENCY SHELL	0.70
CORROSION ALLOWANCE	0"
SPECIFIC GRAVITY	1.0
EARTHQUAKE ZONE	Ss = (0.526) S1 = (0.230)
WIND LOAD	99 MPH
STRESS RELIEF	NOT REQ'D
RADIOGRAPHIC EXAM	SPOT (SEE NOTE 7)
DYE PENETRANT EXAM	NOT REQ'D
MAGNETIC PARTICLE EXAM	NOT REQ'D
HYDROSTATIC TEST	NOT REQ'D
PNEUMATIC TEST	2 PSIG / GAUGE #1
JKT DESIGN AND FAB. CODE	–
JKT CERT. STAMP REQ'D.	–
JKT DESIGN PRESSURE	–
JKT DESIGN TEMPERATURE	–
JKT MIN. DESIGN METAL TEMP.	–
JKT OPERATING PRESSURE	–
JKT OPERATING TEMPERATURE	–
JKT JOINT EFFICIENCY HEADS	–
JKT JOINT EFFICIENCY SHELL	–
JKT HYDRO TEST	–

VESSEL FINISH

INTERIOR WELD TREATMENT:	SAV TANK STANDARD
EXTERIOR WELD TREATMENT:	SAV TANK STANDARD
SAV TANK FINISHING STANDARD:	SEE NOTE 6
INSULATION:	N/A
GALVANIZING:	SEE NOTE 8

VESSEL CAPACITY AND WEIGHTS

OPERATING CAPACITY	7,700 GAL.
FULL CAPACITY	11,650 GAL.
EMPTY SHIPPING WEIGHT W/O HANDRAILS (APPROX.)	2 30,300 LBS.
WEIGHT FULL OF WATER (APPROX.)	2 28,350 LBS.
WEIGHT FULL OF PRODUCT (APPROX.)	2 28,350 LBS.
WEIGHT OF HANDRAILS	2 490 LBS.

QUALITY CONTROL

ENG. _____ DATE: _____

Q.C. _____ DATE: _____

This drawing is issued for customer approval. please review, make approval changes (if any) in red. check the appropriate box, sign & date.

- ☐ Approval – no changes. Please proceed with fabrication.
- ☐ Approved as noted. Please proceed with fabrication
- ☐ Not approved. Please make changes and resubmit.

Customer signature _____ Date _____

GENERAL NOTES

1.) COVER ALL FLANGES, OPENINGS & MACHINED SURFACES PRIOR TO SHIPMENT UNLESS OTHERWISE NOTED.
2.) BOLT HOLES TO STRADDLE 0° & 180° UNLESS OTHERWISE NOTED.
3.) REPADS TO HAVE (1) ø1/4" NPT TELL-TALE HOLES FOR PNEUMATIC TESTING AT 2 PSIG FOR PRESSURE RETAINING PARTS. ALL OTHER REPADS TO HAVE (1) ø1/4" WEEP HOLE AT LOWEST POINT ON PAD.
4.) ASME CODE VESSELS TO BE IN ACCORDANCE WITH UG–80 & UG–81. TOLERANCES: +/– 1/8" FOR DIMENSIONS AND +/– 2 DEGREES FOR ORIENTATIONS.
5.) ASME MATERIALS TO CONFORM TO THE FOLLOWING: FLANGES – B16.5, FITTINGS – B16.9 & COUPLINGS – B16.11.
6.) PICKLE ALL EXTERIOR WELDS. PASSIVATE INTERIOR & EXTERIOR OF VESSEL.
7.) X–RAY: SPOT X–RAY FOR NOZZLE N5 AND REPAD FOR NOZZLE N5 PER CODE.
8.) GALVANIZING: HANDRAILS TO BE HOT DIPPED GALVANIZED.

REVISIONS

REV	D.BY	C.BY	DATE	DESCRIPTION
				AS BUILT
2	AD	RS	8/25/25	CERTIFIED
1	AD	RS	7/20/25	APPROVAL REV 1
0	AD	RS	5/12/25	APPROVAL

Savannah Tank & Equipment Corp.
1517 Telfair Road, Savannah, GA 31415
(912) 233–8902

DRAWN BY: AD
CHK'D BY: RS
APPROVED BY: NP
SCALE: 3/8" = 1'–0"

KIMBERLY CLARK
HC BLEACH TOWER
EQUIP. #420–BT–42001
CUST. PO #C000139275

DRAWING NO.: 018–25–1 SHT 1 OF 6 REV. SET 2

LONG SEAMS

COURSE	ORIENTATION	ORIENTATION
1(TOP)	90°	270°
2	95°	275°
3	90°	270°
4	95°	275°

*BOTTOM HEAD AND COMPONENTS TO BE PROVIDED BY THE CUSTOMER

*VERT – TOP TO BOTTOM

Ship loose items:
(1 PC) A71-24 (GALV.) SWING GATE
(6 PC) HANDRAIL W/ HARDWARE

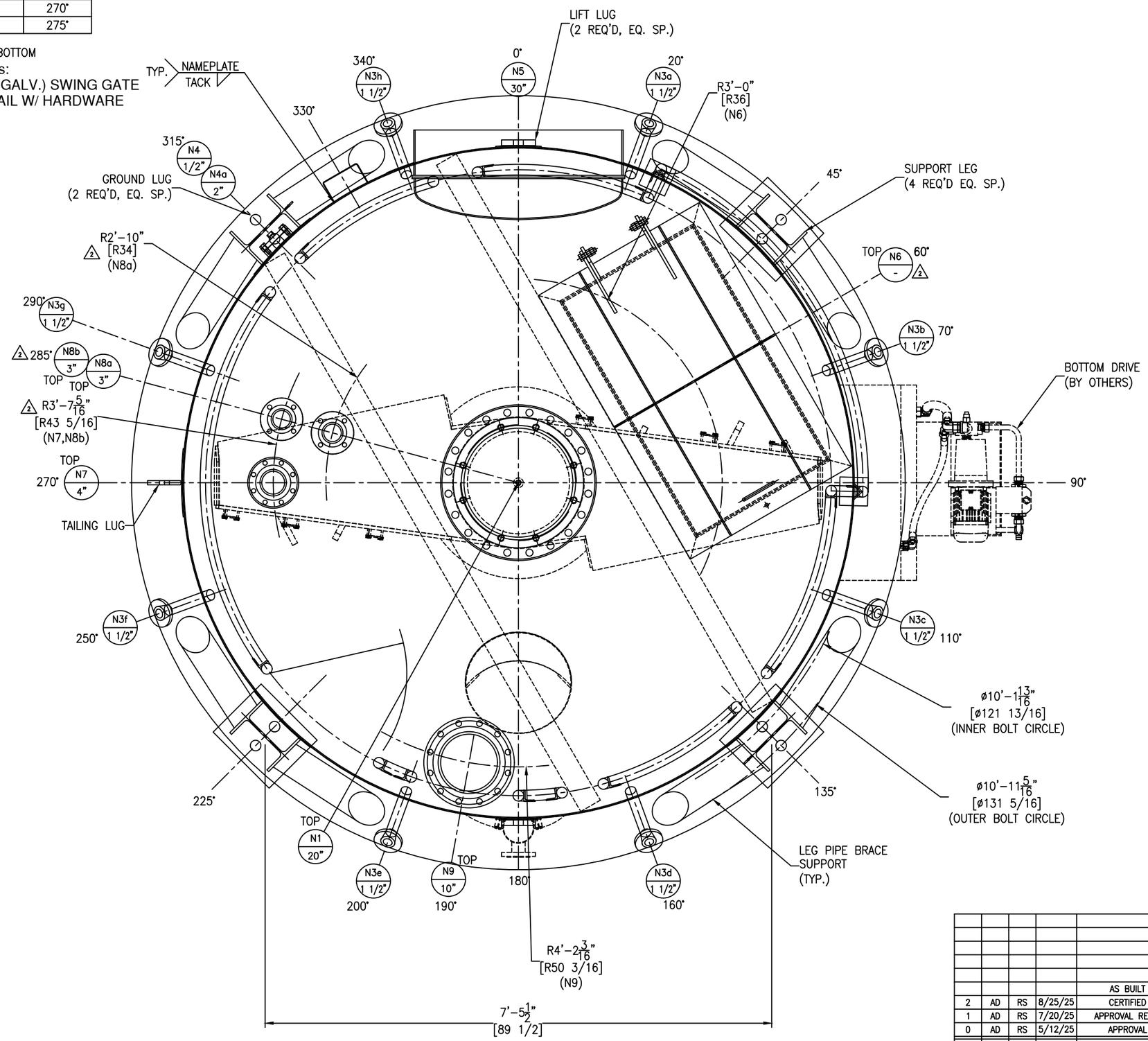

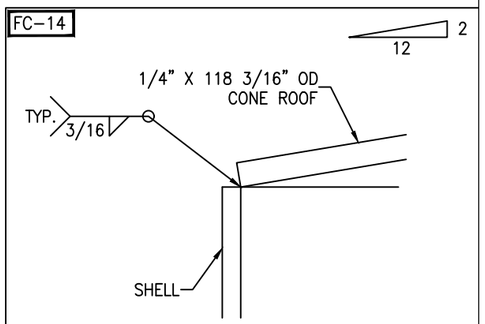

CONE ROOF DETAIL

SCALE: 1'–0"" = 1'–0"

REV	D.BY	C.BY	DATE	DESCRIPTION
				AS BUILT
2	AD	RS	8/25/25	CERTIFIED
1	AD	RS	7/20/25	APPROVAL REV 1
0	AD	RS	5/12/25	APPROVAL

REVISIONS

Savannah Tank & Equipment Corp.
1517 Telfair Road, Savannah, GA 31415
(912) 233-8902

DRAWN BY: AD
CHK'D BY: RS
APPROVED BY: NP
SCALE: 1" = 1'–0"

KIMBERLY CLARK
HC BLEACH TOWER
EQUIP. #420–BT–42001
CUST. PO #C000139275

DRAWING NO.: 018–25–2 SHT 2 OF 6 REV. SET 2

FC-14

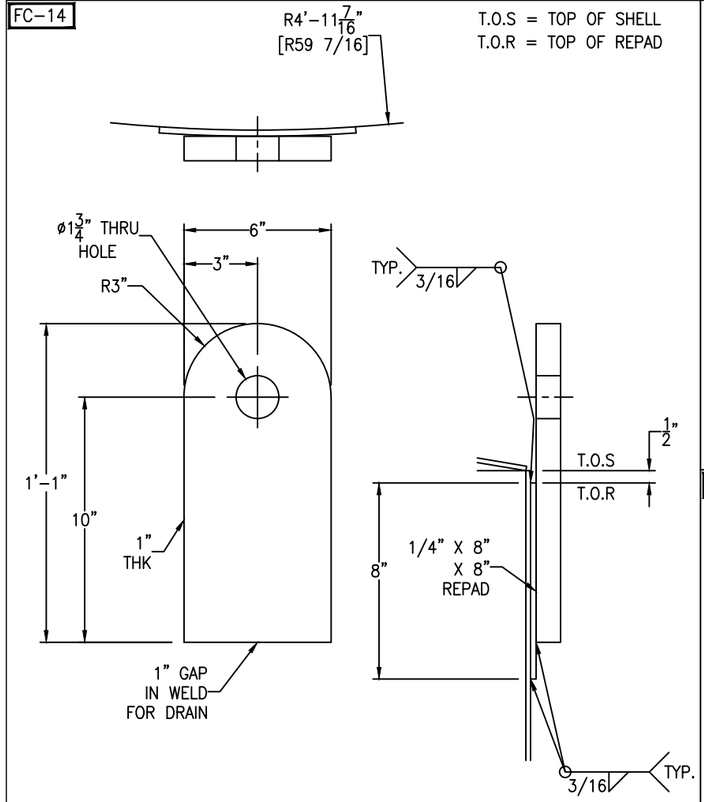

TANK WT. <= 30000#
SHACKLE PIN DIA. = 1 5/8"

LIFT LUG DETAIL

(2 REQ'D) SCALE: 3" = 1'-0"

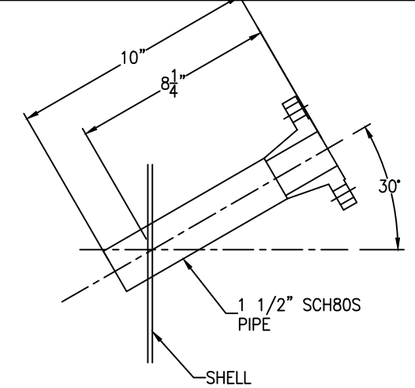

NOZZLE N3a THRU N3h DETAIL

(8 REQ'D) SCALE: 3" = 1'-0"

FC-14

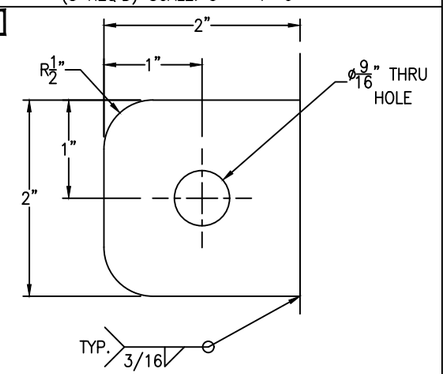

GROUND LUG IS LOCATED @ 135° AND 315°

GROUND LUG DETAIL

(2 REQ'D) SCALE: 1'-0" = 1'-0"

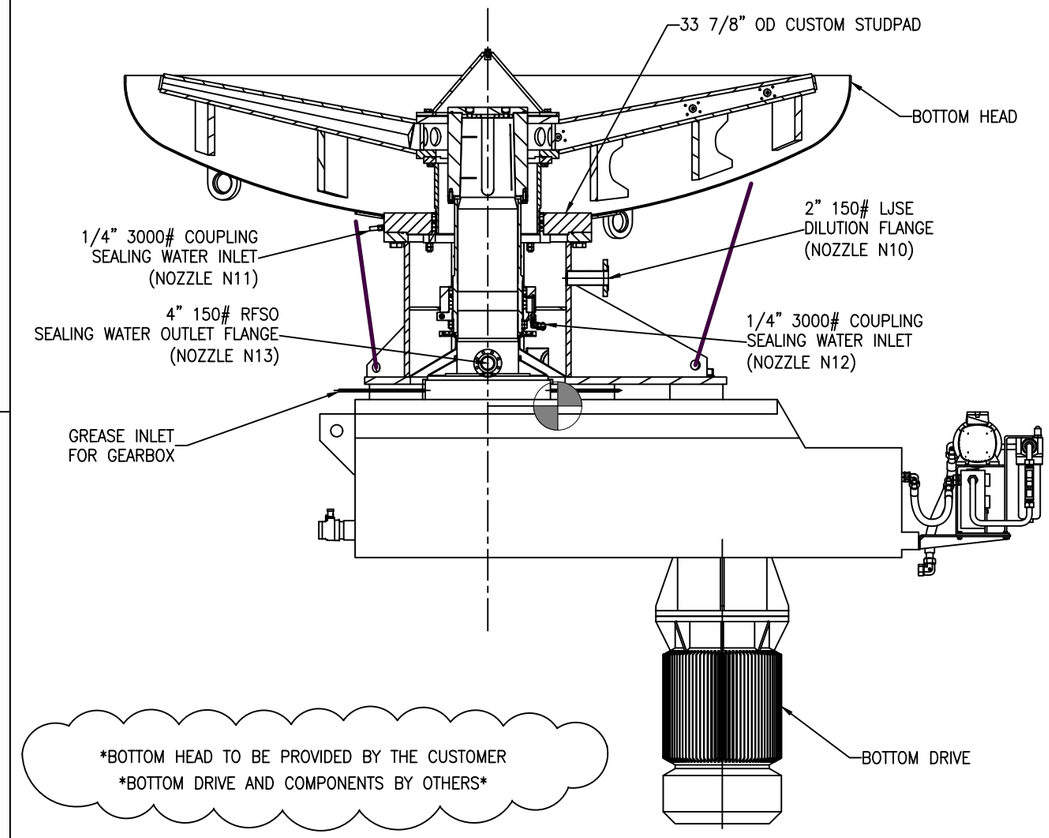

BOTTOM HEAD AND BOTTOM DRIVE DETAIL

SCALE: 3/4" = 1'-0"

FC-14

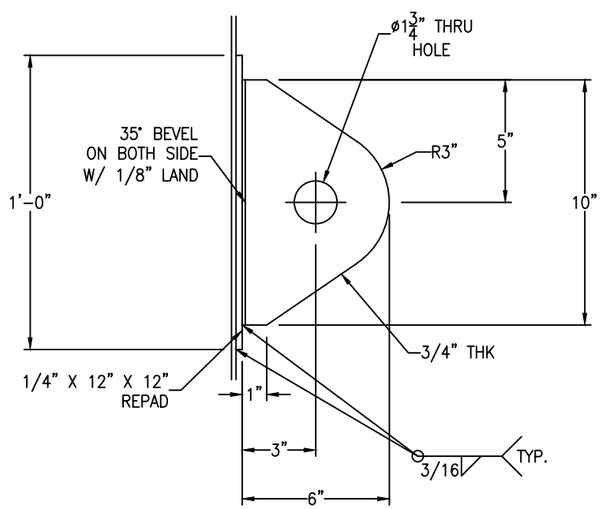

TANK WT. <= 30000#
SHACKLE PIN DIA. = 1 5/8"

TAILING LUG DETAIL

(1 REQ'D) SCALE: 3" = 1'-0"

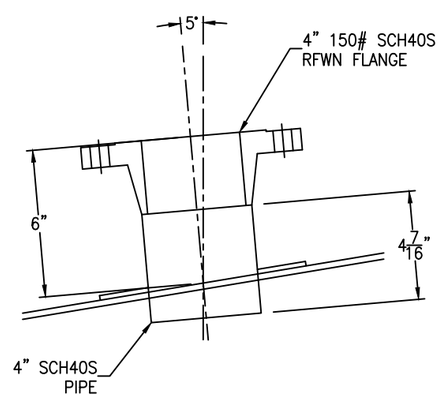

⚠2 NOZZLE N7 DETAIL

SCALE: 3" = 1'-0"

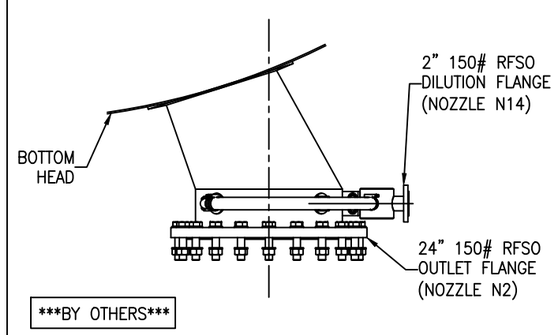

BOTTOM NOZZLE DETAIL

SCALE: 3/4" = 1'-0"

REV	D.BY	C.BY	DATE	DESCRIPTION
				AS BUILT
2	AD	RS	8/25/25	CERTIFIED
1	AD	RS	7/20/25	APPROVAL REV 1
0	AD	RS	5/12/25	APPROVAL

⚠1 REVISIONS

Savannah Tank & Equipment Corp.
1517 Telfair Road, Savannah, GA 31415
(912) 233-8902

DRAWN BY: AD
CHK'D BY: RS
APPROVED BY: NP
SCALE: 3/8" = 1'-0"

KIMBERLY CLARK
HC BLEACH TOWER
EQUIP. #420-BT-42001
CUST. PO #C000139275

DRAWING NO.: 018-25-3 SHT 3 OF 6 REV. SET 2

FC-14

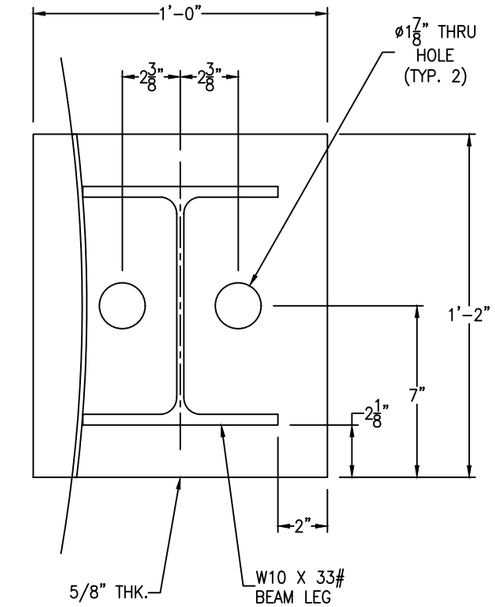

FOOT DETAIL

(4 REQ'D) SCALE: 3" = 1'-0"

FC-14

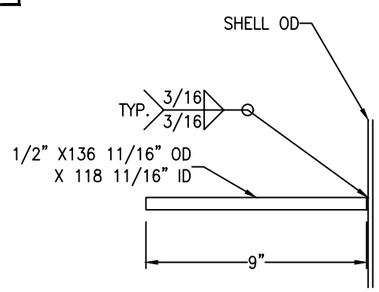

SUPPORT RING DETAIL

SCALE: 3" = 1'-0"

FC-14

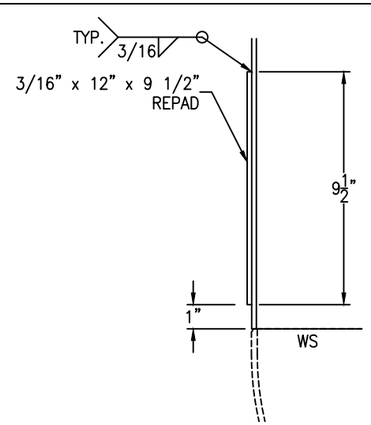

LEG REPAD DETAIL

(4 REQ'D) SCALE: 3" = 1'-0"

FC-14

BOR = BOTTOM OF RING

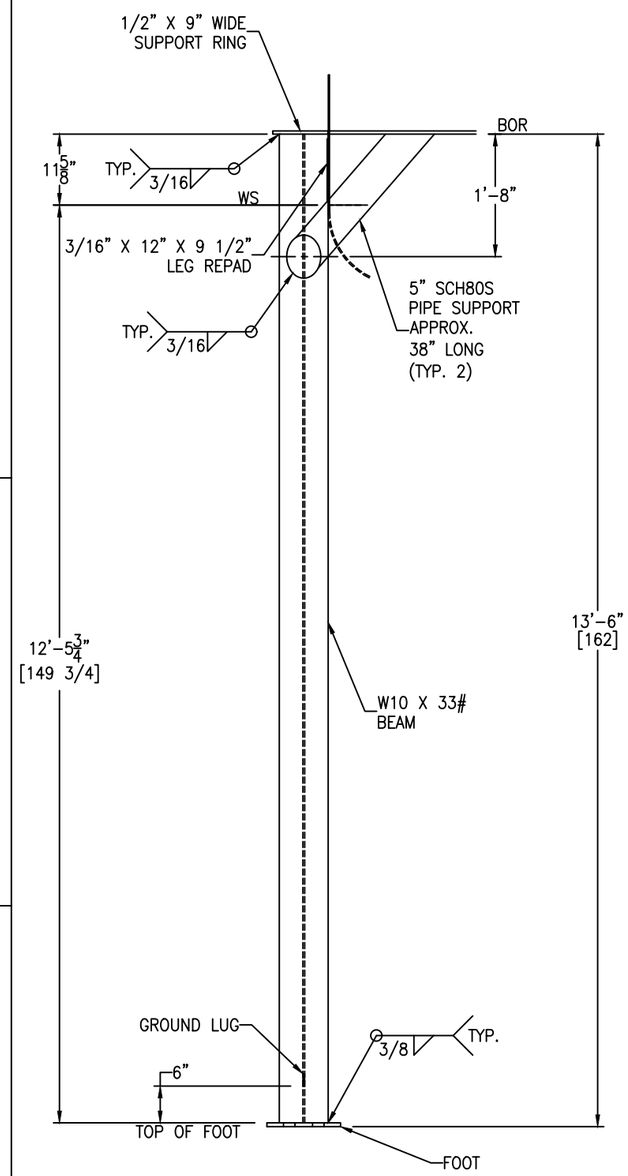

SUPPORT LEG DETAIL

(4 REQ'D) SCALE: 3/4" = 1'-0"

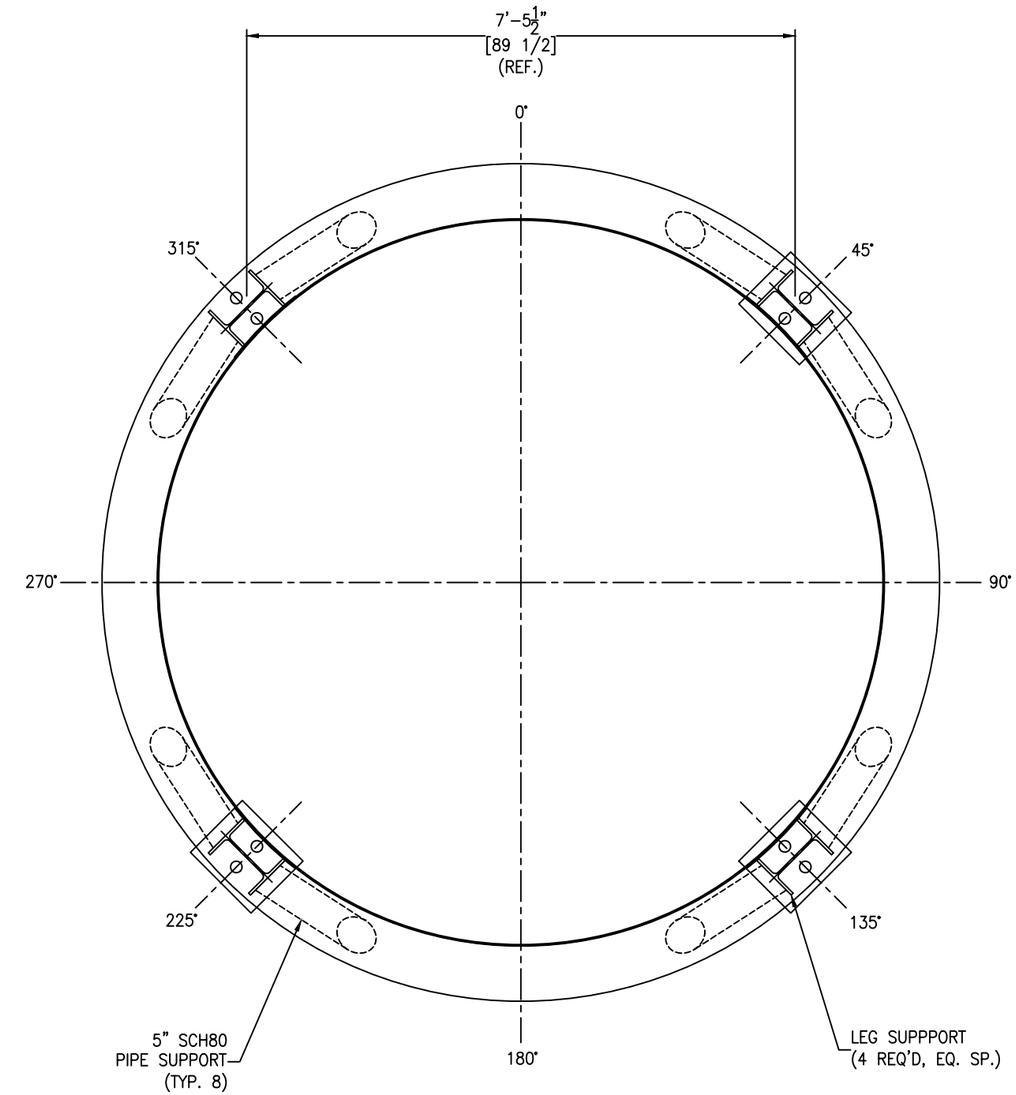

SUPPORT LEG DETAIL

SCALE: 3/4" = 1'-0"

REV	D.BY	C.BY	DATE	DESCRIPTION
				AS BUILT
2	AD	RS	8/25/25	CERTIFIED
1	AD	RS	7/20/25	APPROVAL REV 1
0	AD	RS	5/12/25	APPROVAL

⚠1 REVISIONS

Savannah Tank & Equipment Corp.
1517 Telfair Road, Savannah, GA 31415
(912) 233-8902

DRAWN BY: AD
CHK'D BY: RS
APPROVED BY: NP
SCALE: 3/8" = 1'-0"

KIMBERLY CLARK
HC BLEACH TOWER
EQUIP. #420-BT-42001
CUST. PO #C000139275

DRAWING NO.: 018-25-4 SHT 4 OF 6 REV. SET 2

FC-14

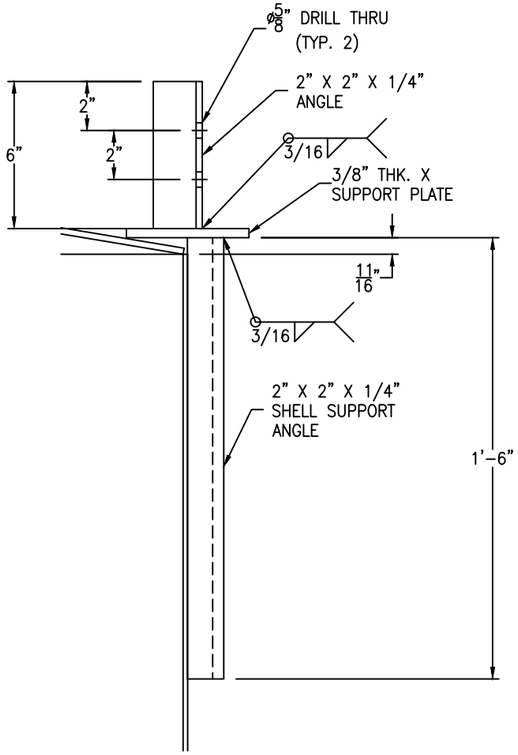

2 POST CLIP DETAIL FOR EXTENDED HANDRAIL

(2 REQ'D) SCALE: 3" = 1'-0"

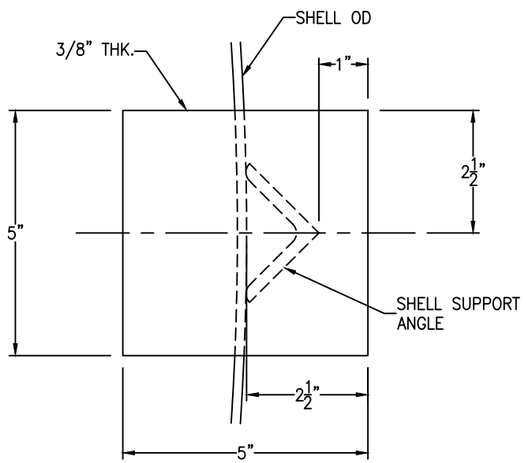

2 SUPPORT PLATE DETAIL FOR EXTENDED HANDRAIL

(2 REQ'D) SCALE: 6" = 1'-0"

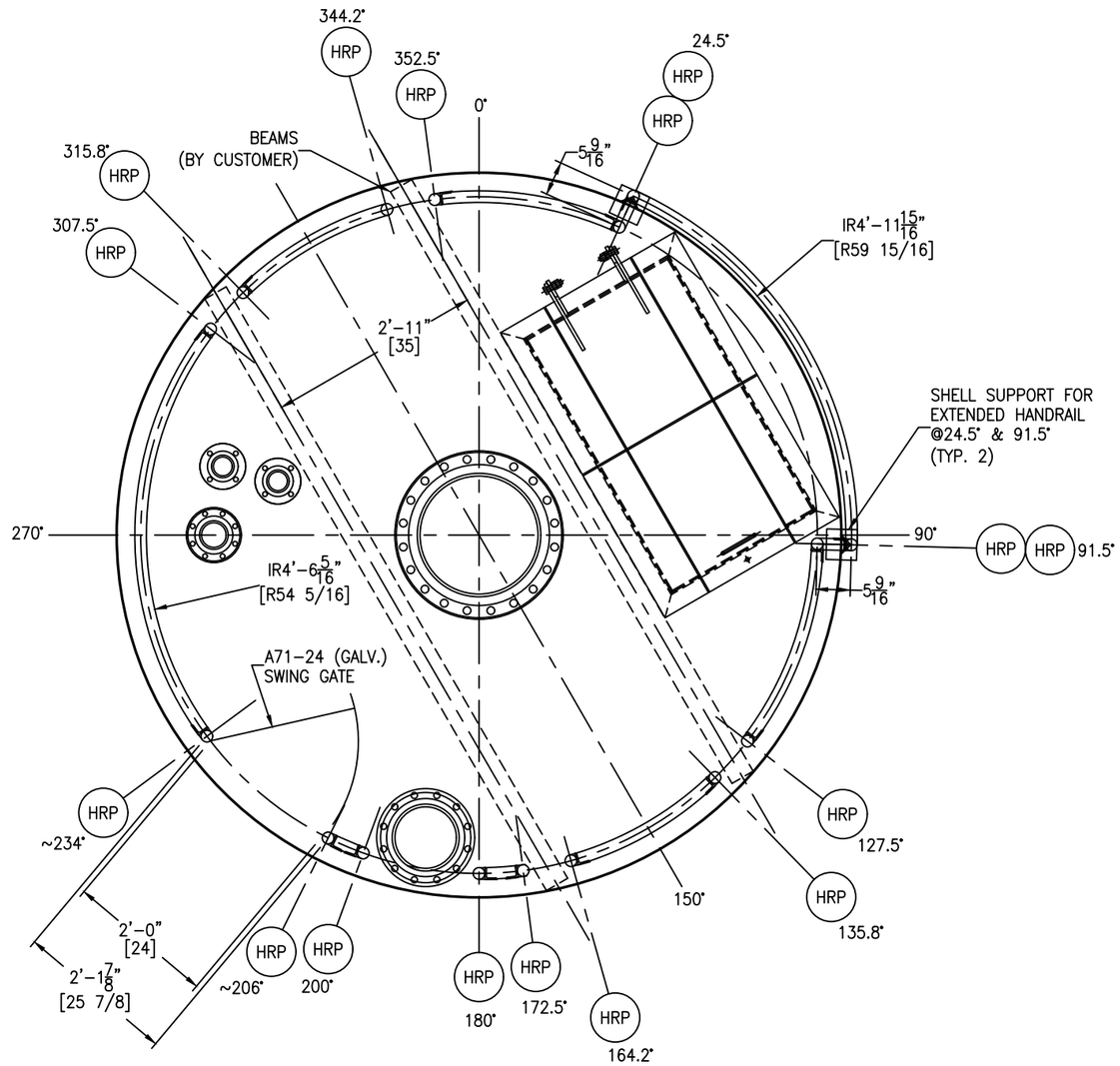

2 HANDRAIL DETAIL

SCALE: 3/4" = 1'-0"

FC-14

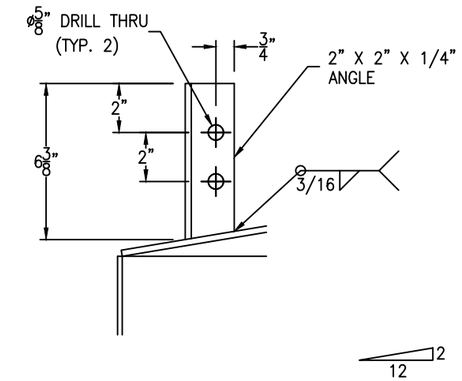

*NOTE: CUT CLIP TO MATCH HEAD.

POST CLIP DETAIL FOR REGULAR HANDRAIL

2 (14 REQ'D) SCALE: 3" = 1'-0"

GM-73

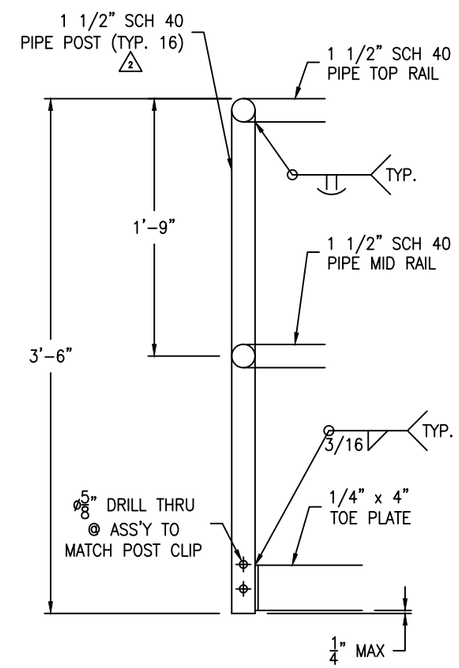

HANDRAIL DETAIL

SCALE: 1 1/2" = 1'-0"

HANDRAIL BOLTING:
2 (32) 1/2-13 NC X 3" HH BOLT - SA193-B7 (ZINC PLATED)
(32) 1/2-13 NC HH NUT - SA194-2H (ZIINC PLATED)

HANDRAIL TO BE HOT-DIPPED GALVANIZED

REV	D.BY	C.BY	DATE	DESCRIPTION
				AS BUILT
2	AD	RS	8/25/25	CERTIFIED
1	AD	RS	7/20/25	APPROVAL REV 1
-	-	-	-	-

1 REVISIONS

Savannah Tank & Equipment Corp.
1517 Telfair Road, Savannah, GA 31415
(912) 233-8902

DRAWN BY: AD
CHK'D BY: RS
APPROVED BY: NP
SCALE: 3/8" = 1'-0"

KIMBERLY CLARK
HC BLEACH TOWER
EQUIP. #420-BT-42001
CUST. PO #C000139275

DRAWING NO.: 018-25-5 SHT 5 OF 6 REV. SET 2

FC-14

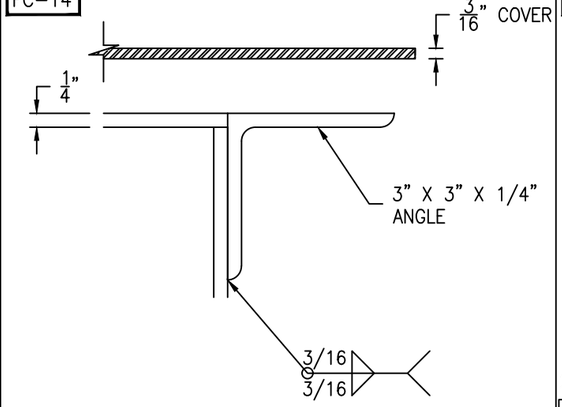

FLANGE/COVER DETAIL

(1 REQ'D) SCALE: 6" = 1'-0"

FC-14

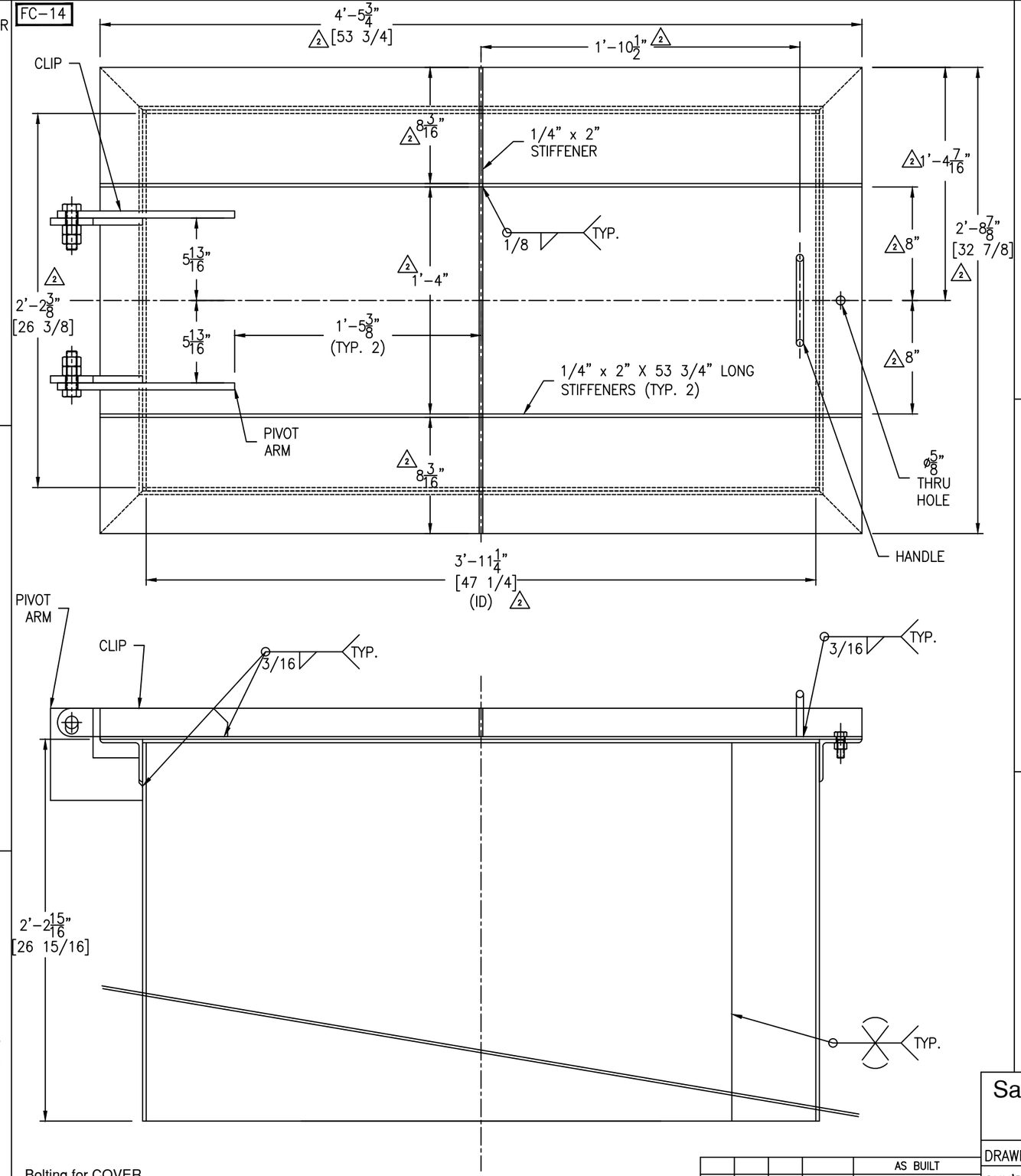

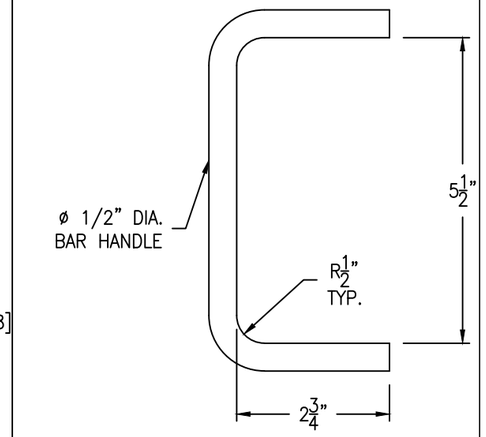

HANDLE DETAIL

(2 REQ'D) SCALE: 6" = 1'-0"

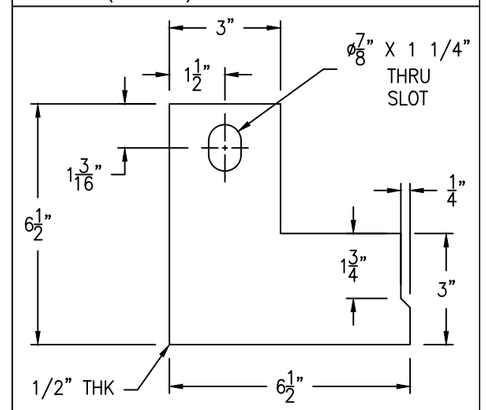

PIVOT ARM DETAIL

(2 REQ'D) SCALE: 1" = 1'-0"

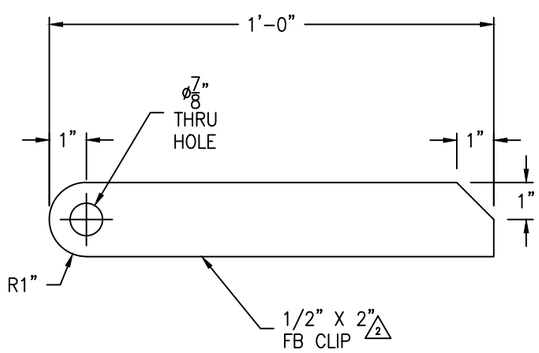

CLIP DETAIL

(2 REQ'D) SCALE: 1" = 1'-0"

Bolting for COVER
(1) 1/2-13 NC x 1 1/2" HH BOLT (SA193-B8 (TEFLON COATED))
(1) 1/2-13 NC HH NUT (SA194-8 (TEFLON COATED))

Bolting for HINGE
(2) 3/4-10 NC x 3 1/4" HH BOLT (SA193-B8 (TEFLON COATED))
(4) 3/4-10 NC HH NUT (SA194-8 (TEFLON COATED))

REV	D.BY	C.BY	DATE	DESCRIPTION
				AS BUILT
2	AD	RS	8/25/25	CERTIFIED
1	AD	RS	7/20/25	APPROVAL REV 1
0	AD	RS	5/12/25	APPROVAL

REVISIONS

Savannah Tank & Equipment Corp.
1517 Telfair Road, Savannah, GA 31415
(912) 233-8902

DRAWN BY: AD
CHK'D BY: RS
APPROVED BY: NP
SCALE: 2" = 1'-0"

KIMBERLY CLARK
HC BLEACH TOWER
EQUIP. #420-BT-42001
CUST. PO #C000139275

DRAWING NO.: 018-25-6 SHT 6 OF 6 REV. SET 2